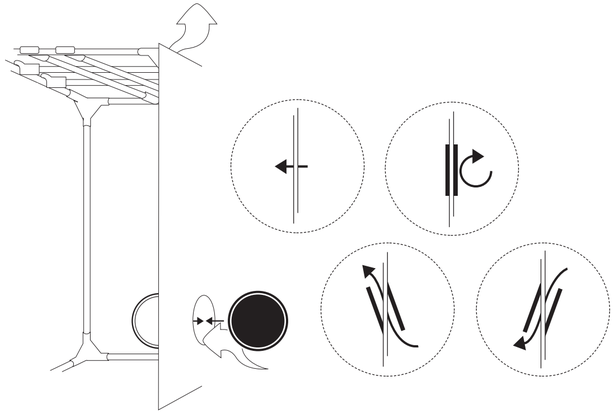

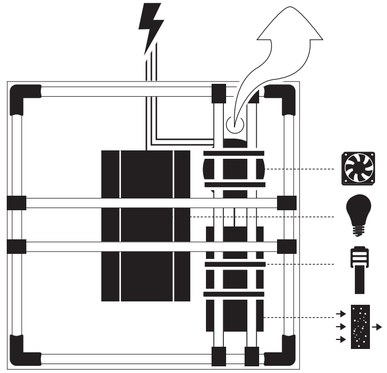

www.homebox.net

HOMEbox® AMBIENT Q150+

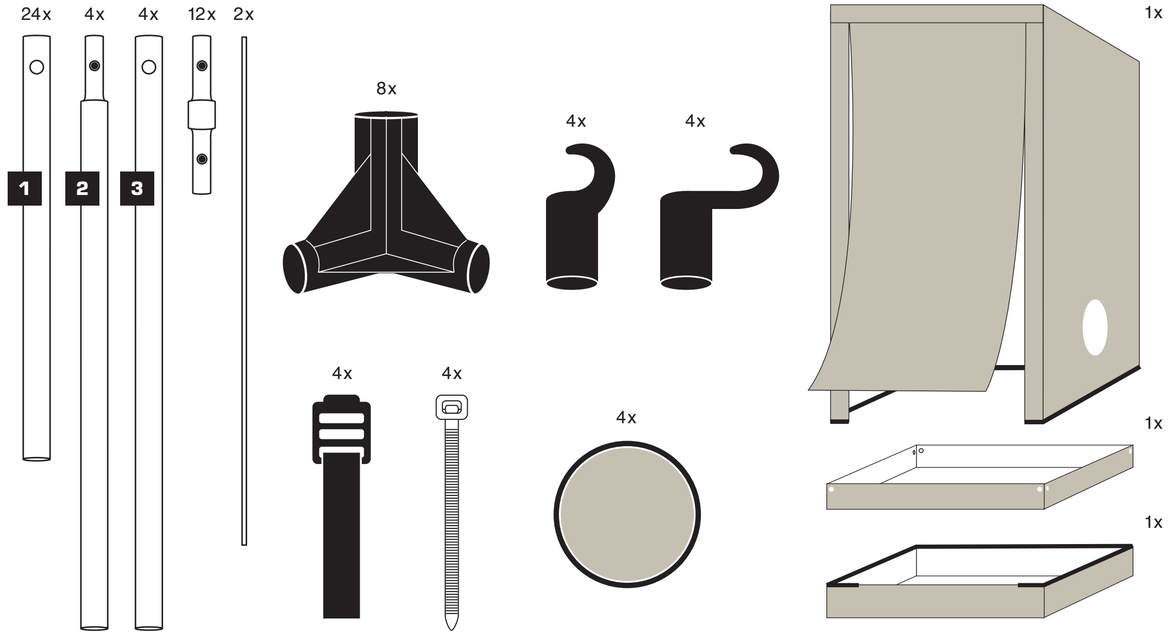

HOMEbox® AMBIENT

1

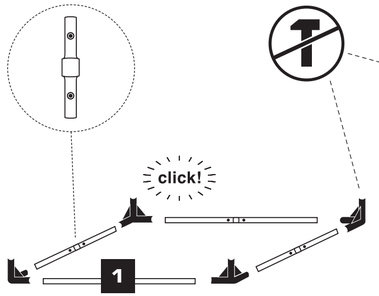

2

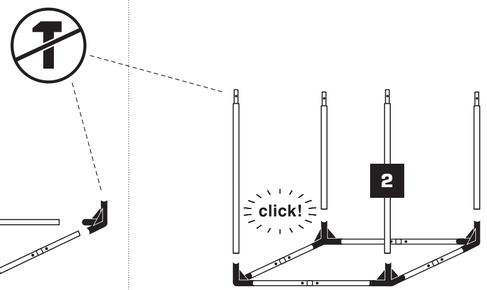

3

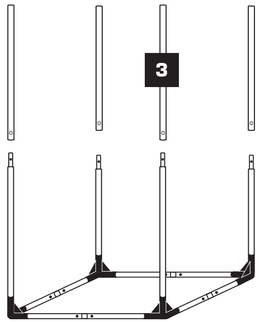

4

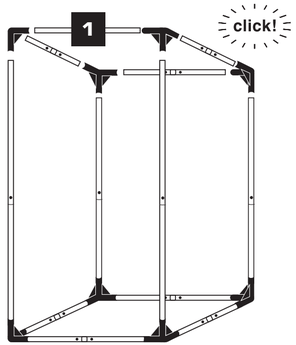

5

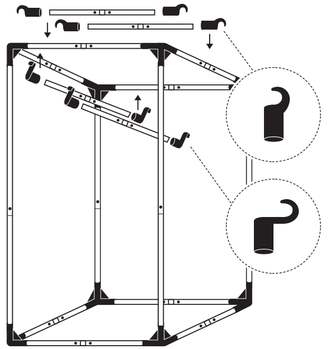

6

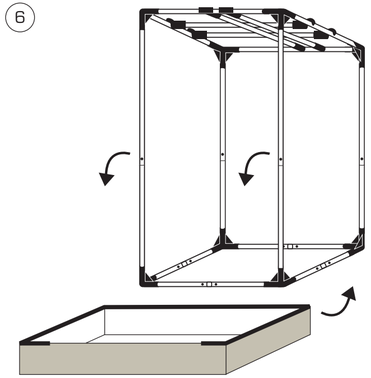

7

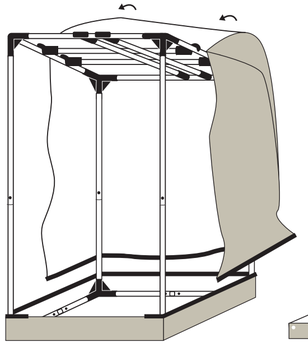

8

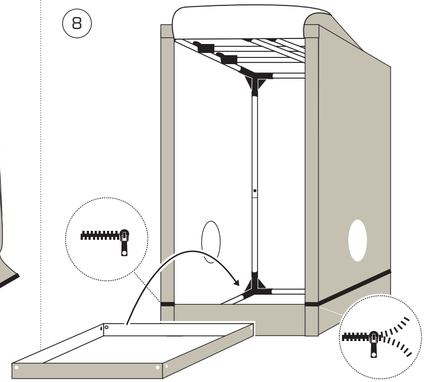

9

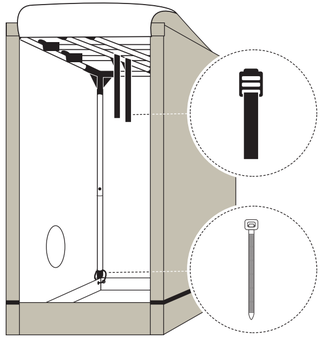

10

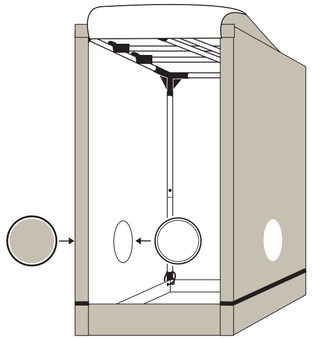
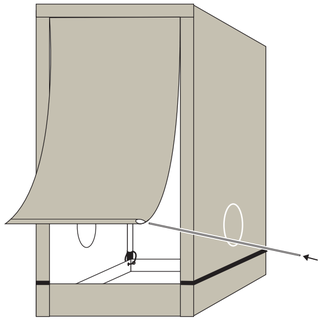
11